NOTES:

1. LUMINAIRE # 22 455 – SEE SPECIFICATIONS

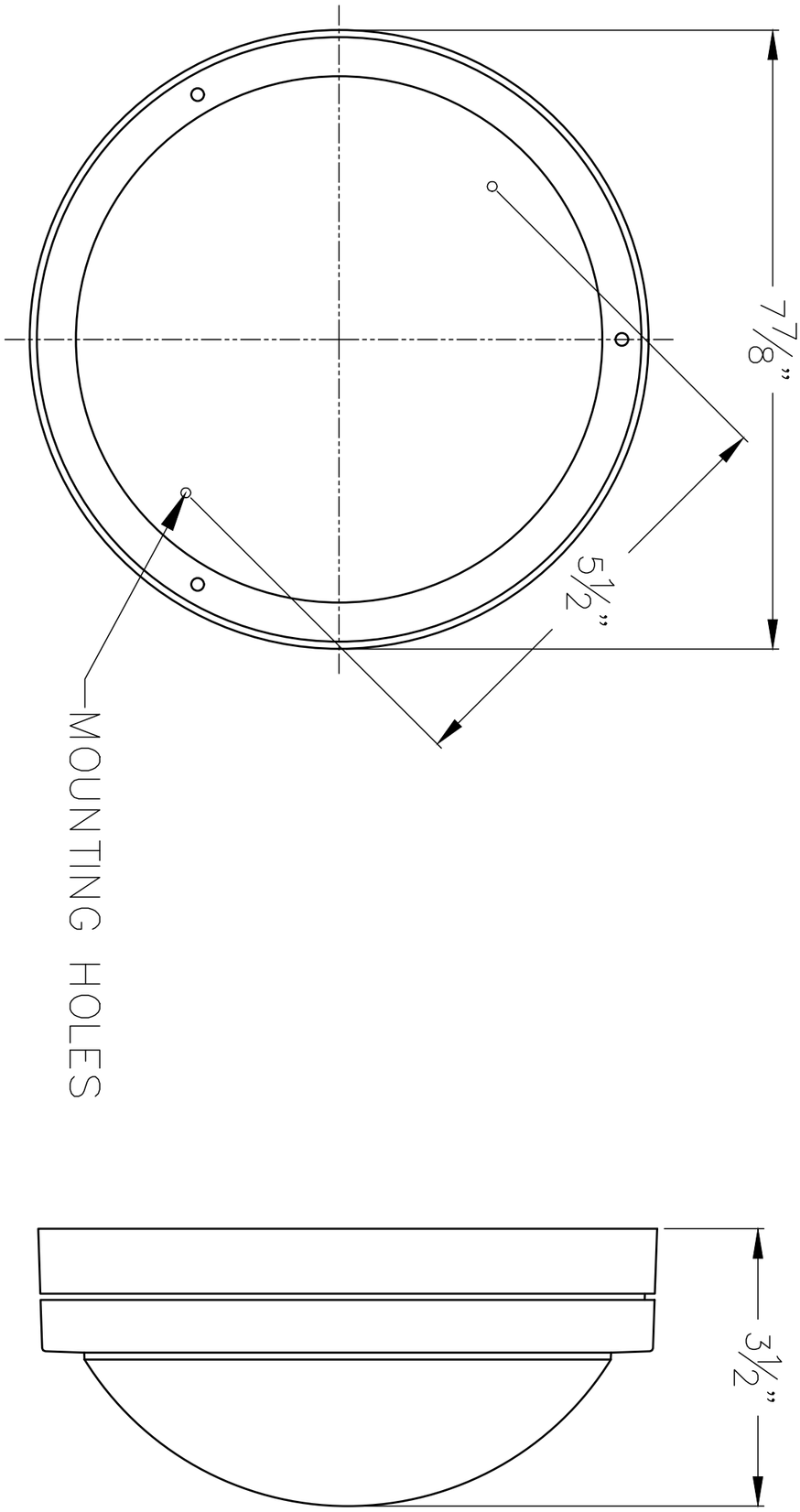

TYPE: _____

SUBMITTAL APPROVAL			CAT NO.: 22 455	BEGA
APPROVED BY:			PROJECT:	1000 Bega Way
SIGNED:		DATE:	LOCATION:	Carpinteria, Ca. 93013
			DRAWN: MAP DATE: 11/11/2015 File Name: 22455.dxf	(805) 684-0533
REV.	DATE	DESCRIPTION		

This print contains confidential information which is the property of BEGA U.S. By acception this information, the borrower agrees that it will not be used for any other purpose other than that which is was loaned.