NOTE: PENDANT LUMINAIRE # 50 614.X – SEE SPECIFICATIONS

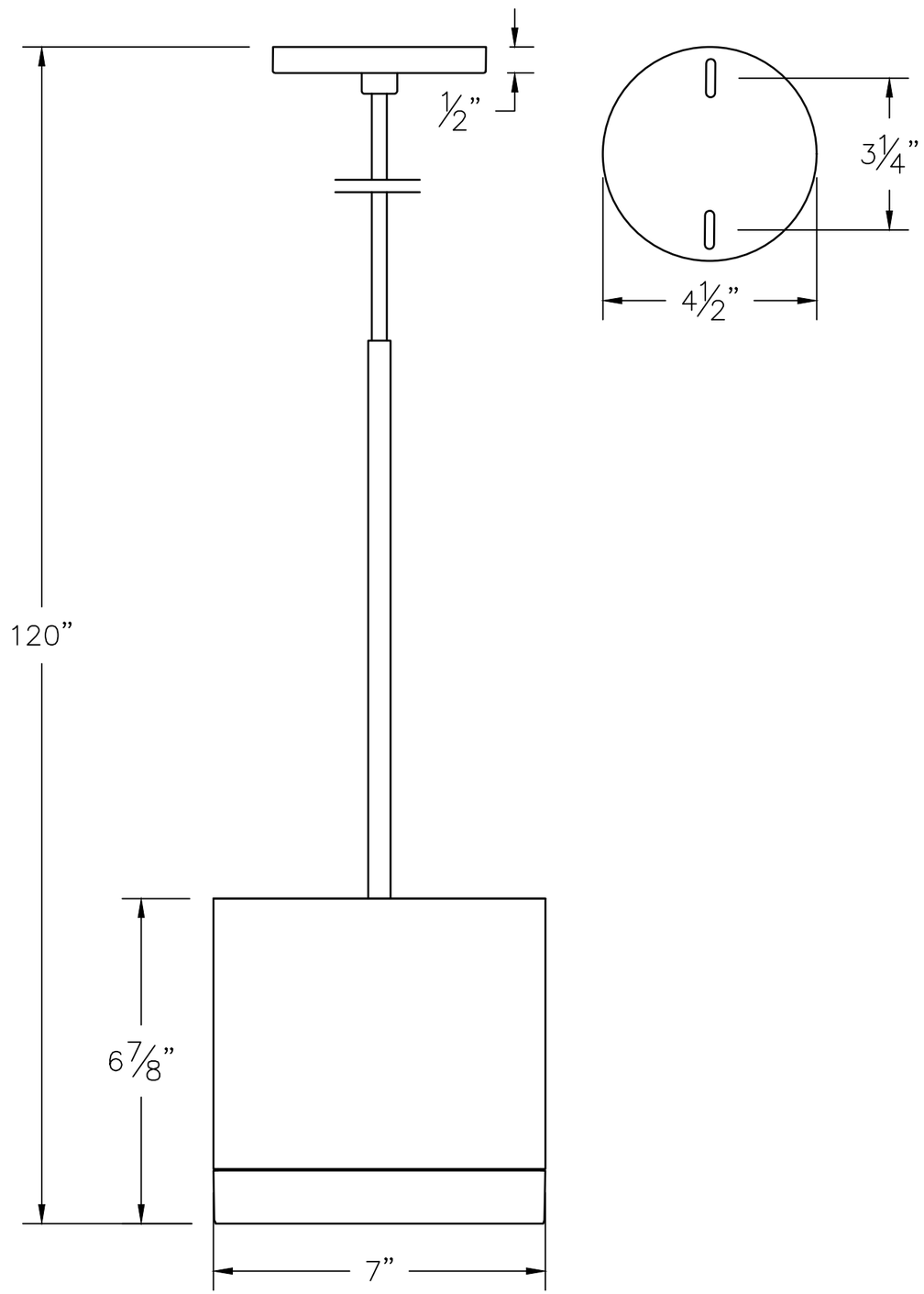

TYPE: _____

SUBMITTAL APPROVAL

APPROVED BY: _____

SIGNED: DATE:

REV.	DATE	DESCRIPTION

BEGA

1000 Bega Way
Carpinteria, Ca. 93013
(805) 684-0533

CAT NO.: 50 614.X
PROJECT: -
LOCATION: -
DRAWN: JA DATE: 07/13/20 FILE NAME: 50614.dxf

This print contains confidential information which is the property of BEGA U.S. By acception this information, the borrower agrees that it will not be used for any other purpose other than that which is was loaned.