NOTES:

1. LUMINAIRE # 7265LED – SEE SPECIFICATIONS

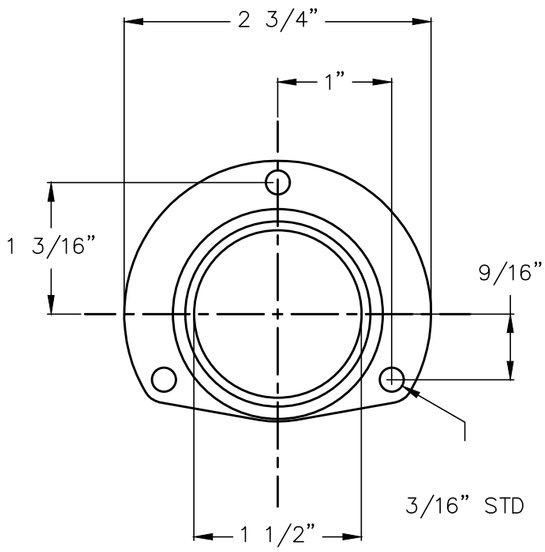

ANCHORAGE BASE DETAIL
(NOT TO SCALE)

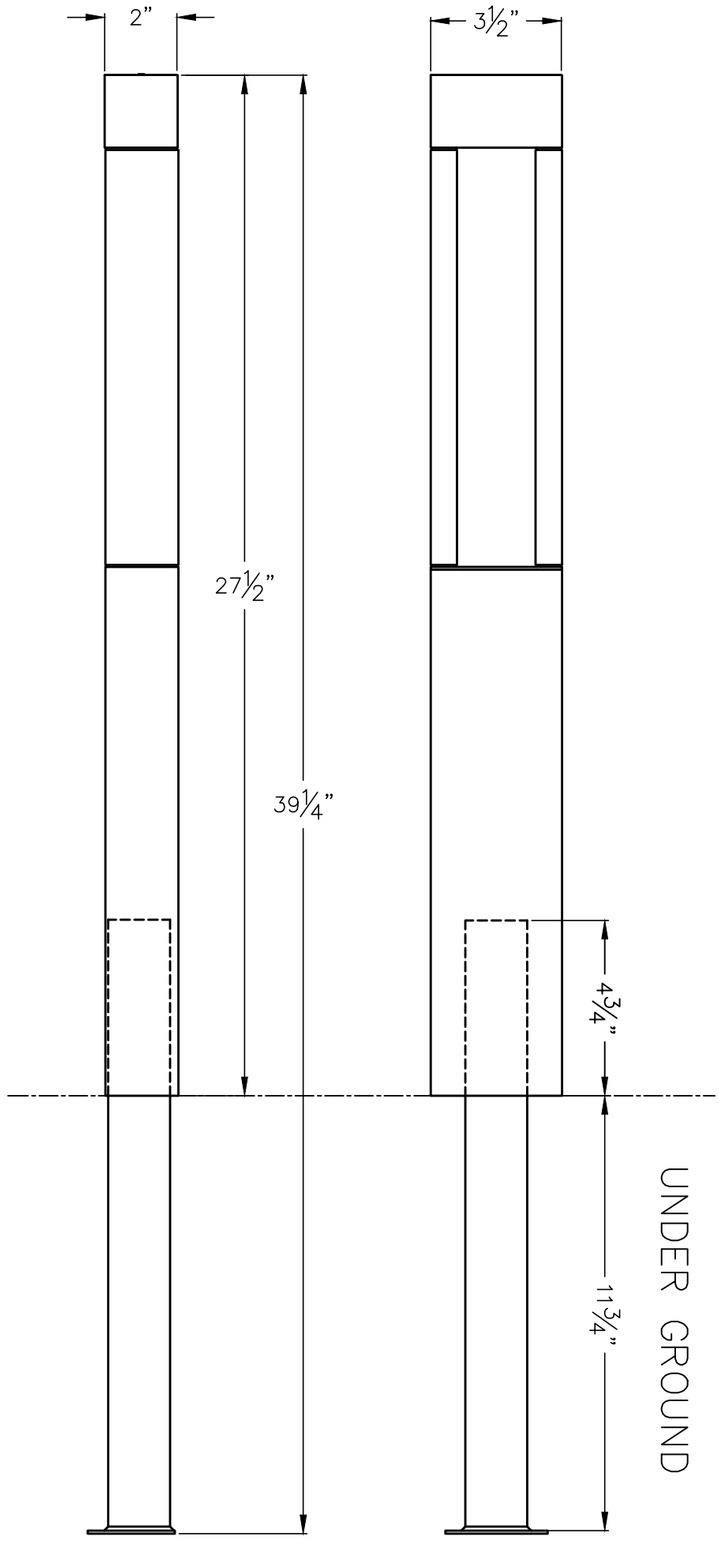

SIDE VIEW

FRONT VIEW

TYPE: _____

SUBMITTAL APPROVAL			CAT NO.: 7265LED	BEGA
APPROVED BY:			PROJECT:	1000 Bega Way Carpinteria, Ca. 93013 (805) 684-0533
SIGNED:		DATE:	LOCATION:	
			DRAWN: AV DATE: 8/10/2015 File Name: 7265LED.DXF	
REV.	DATE	DESCRIPTION		

This print contains confidential information which is the property of BEGA U.S. By acception this information, the borrower agrees that it will not be used for any other purpose other than that which is was loaned.