NOTES:

1. LUMINAIRE # 77 836 – SEE SPECIFICATIONS.

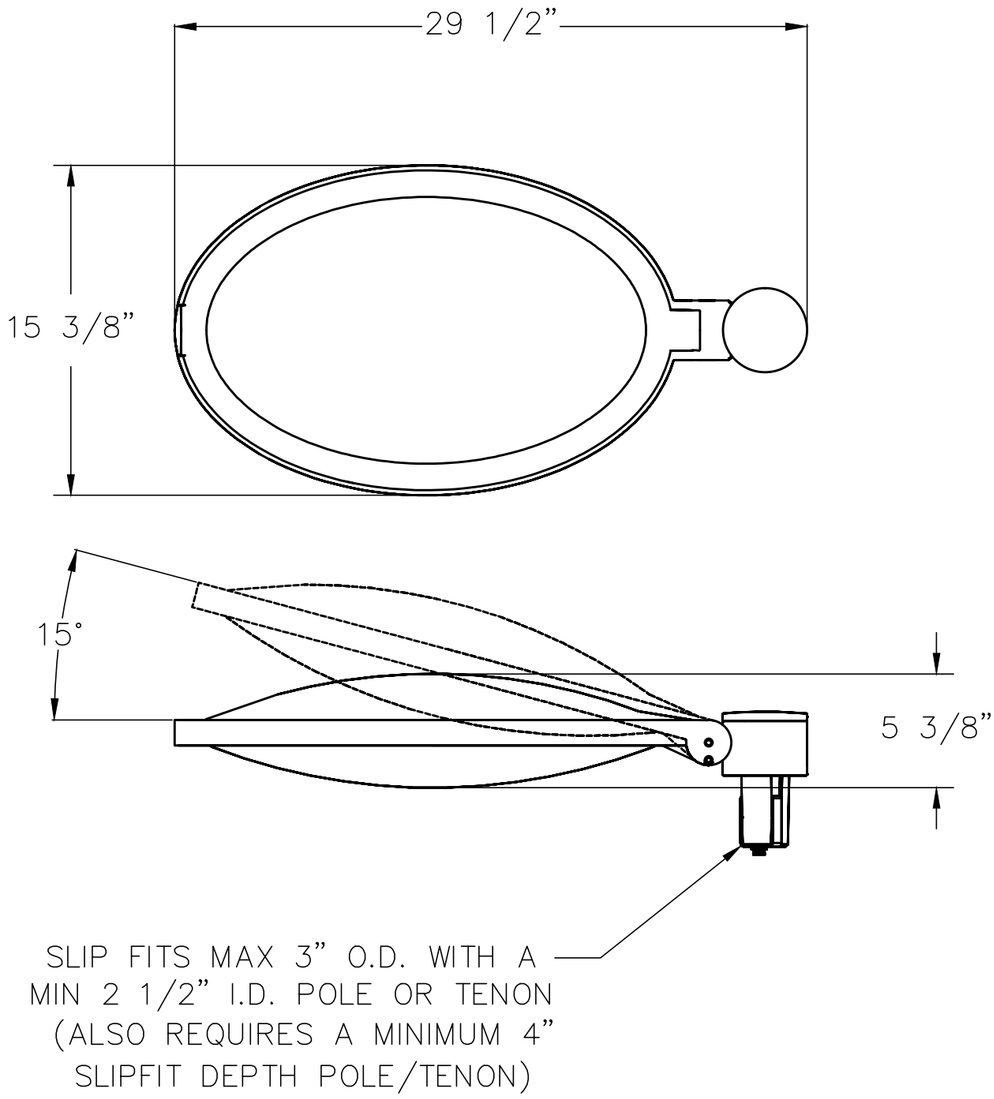

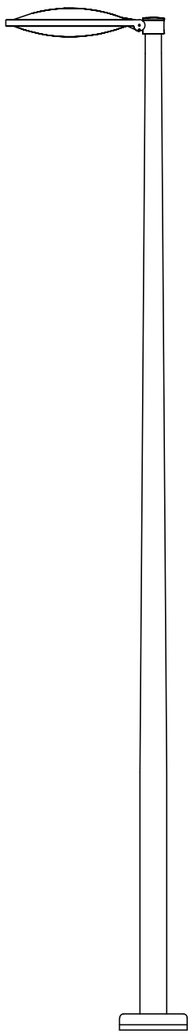

SHOWN ON 1508HR

TYPE: _____

SUBMITTAL APPROVAL			CAT NO.: 77 836	BEGA
APPROVED BY: _____			PROJECT:	1000 Bega Way Carpinteria, Ca. 93013 (805) 684-0533
SIGNED:		DATE:	LOCATION:	
			DRAWN: MAP DATE: 8/10/15 File Name: 77836.dxf	
REV.	DATE	DESCRIPTION		

This print contains confidential information which is the property of BEGA U.S. By acception this information, the borrower agrees that it will not be used for any other purpose other than that which is was loaned.