REV	CHANGED BY	DESCRIPTION	DATE

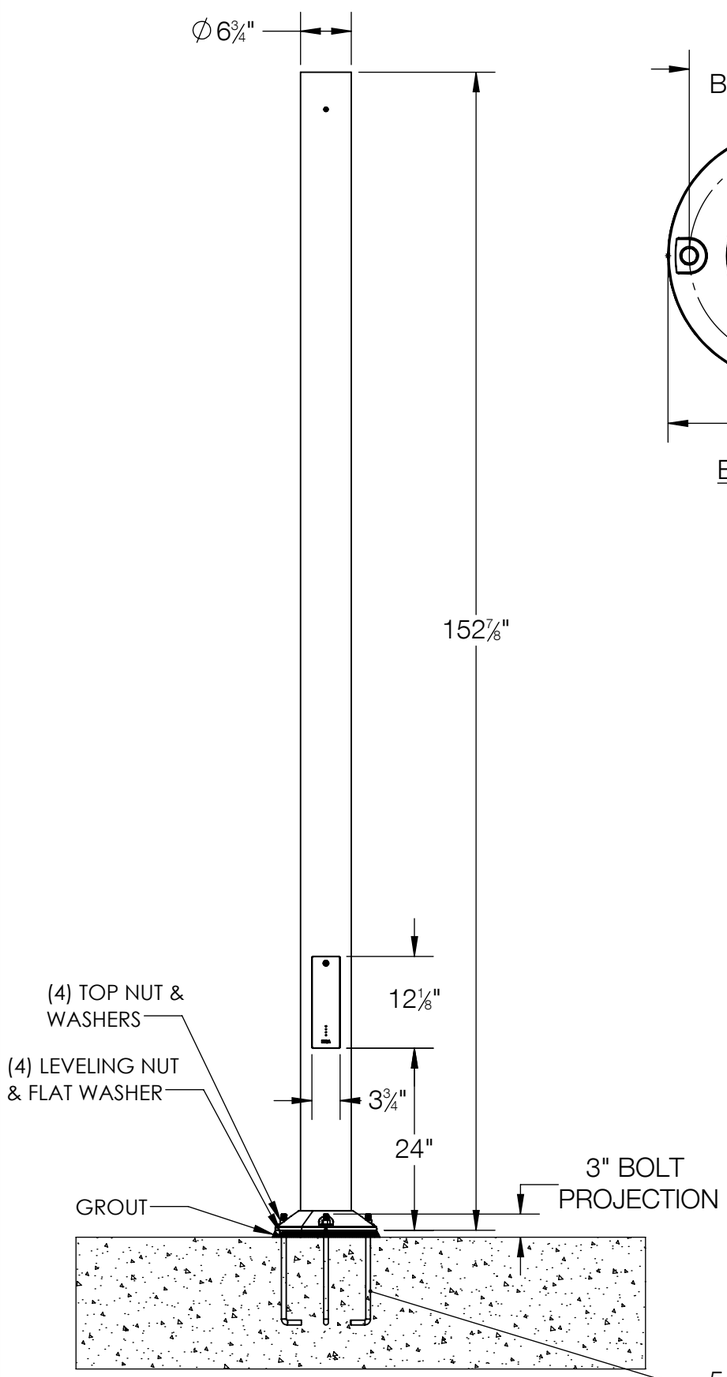

NOTE: ADEQUATE DRAINAGE MUST BE PROVIDED IN CONCRETE FOUNDATION OR GROUT

5/8" x 14" ANCHOR BOLTS FOR USE IN POURED CONCRETE CONSTRUCTION

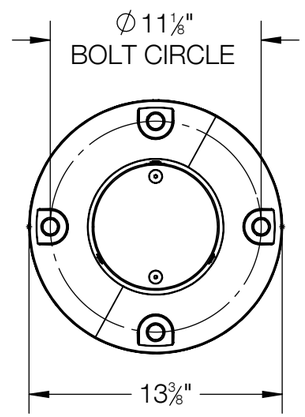

BASE DETAILS

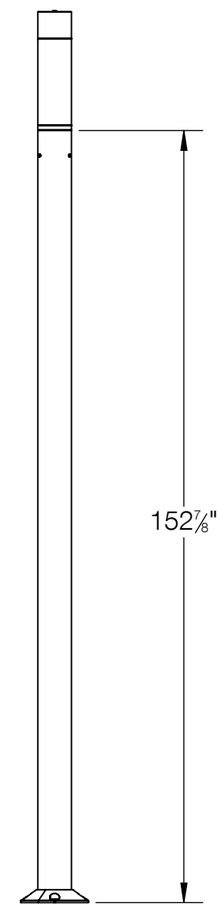

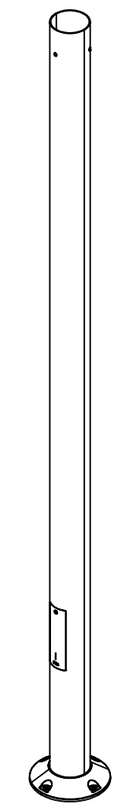

84713 SYSTEM BUILDING ELEMENT POLE SHOWN WITH SYSTEM BUILDING ELEMENT HEAD 84816 (NOT TO SCALE, HEAD SOLD SEPERATELY)

NOTES:

1. INCLUDES B79992 - ANCHOR KIT. ANCHOR KIT INCLUDES (4) 5/8" x 14" L-BOLTS, WASHERS AND NUTS. SUPPLIED WITH POLE OR IN ADVANCE
2. SYSTEM BUILDING ELEMENT POLE FOR USE WITH SYSTEM BUILDING ELEMENT HEAD ONLY. SEE WEBSITE FOR COMPATIBLE HEAD OPTIONS.
3. SUITABLE FOR INSTALLATION IN WIND ZONES WITH A MAXIMUM WIND SPEED UP TO 115 MPH PER EN 60598.

BEGA

1000 BEGA Way, Carpinteria, California 93013 P (805) 684-0533 - www.bega-us.com

APPROVED: _____ DATE: _____

TYPE: _____

DESCRIPTION: SYSTEM BUILDING ELEMENT POLE- BASE PLATE

PROPRIETARY AND CONFIDENTIAL

THE INFORMATION CONTAINED IN THIS DRAWING IS THE SOLE PROPERTY OF BEGA NORTH AMERICA, INC.
ANY REPRODUCTION IN PART OR AS A WHOLE WITHOUT THE WRITTEN PERMISSION OF BEGA NORTH AMERICA, INC. IS PROHIBITED.

SIZE	PART NO.	REV
B	84713	-
NOT TO SCALE	7/7/2025	SHEET 1 OF 1