BEGA 95 005

Ash receptacle

Installation instructions

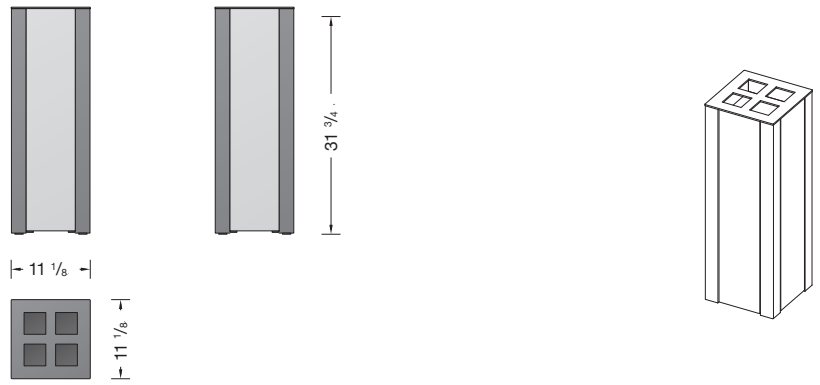

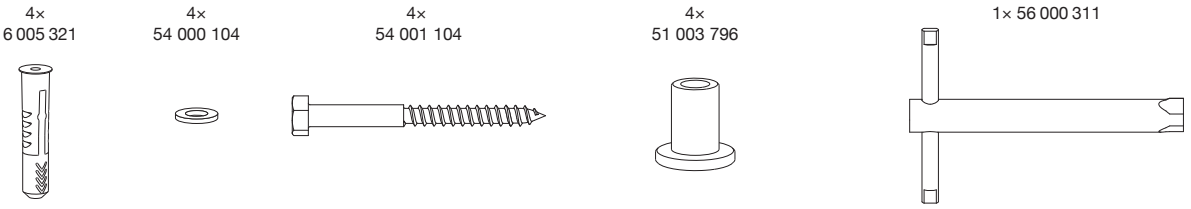

1.

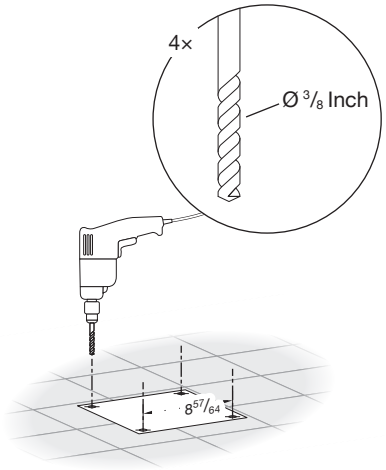

2.

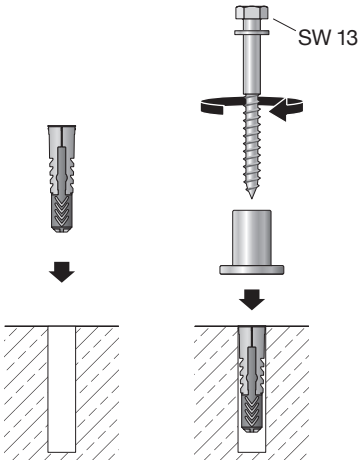

4.

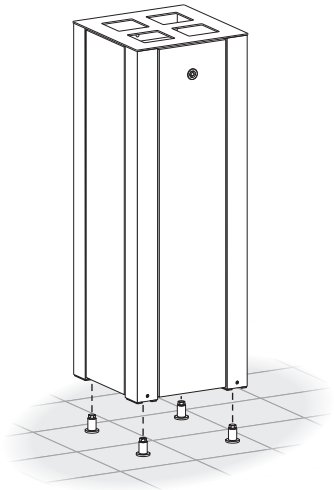

5.

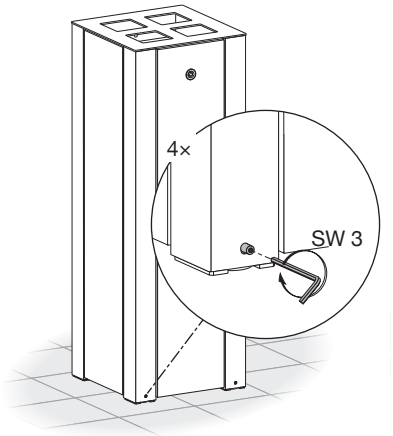

BEGA 1000 Bega Way, Carpinteria, CA 93013 (805)684-0533 © copyright BEGA 2023
Due to the dynamic nature of our products and the associated technologies, data on this sheet is subject to change
at the discretion of BEGA North America. For the most current technical data, please consult factory.