BEGA **95 027**

Table · Rectangular with umbrella hole

Installation instructions

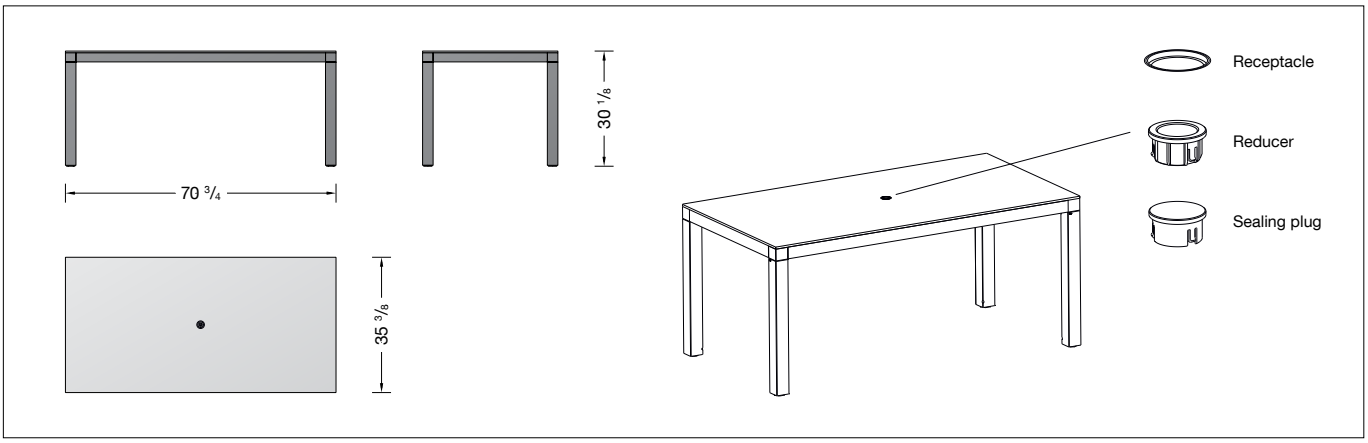

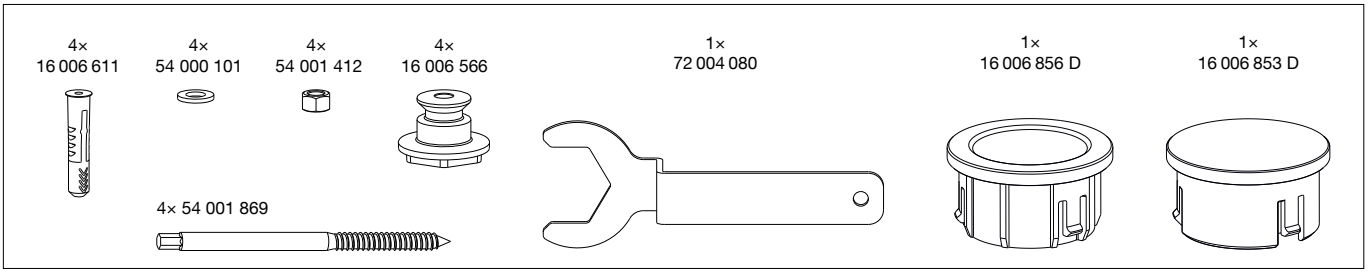

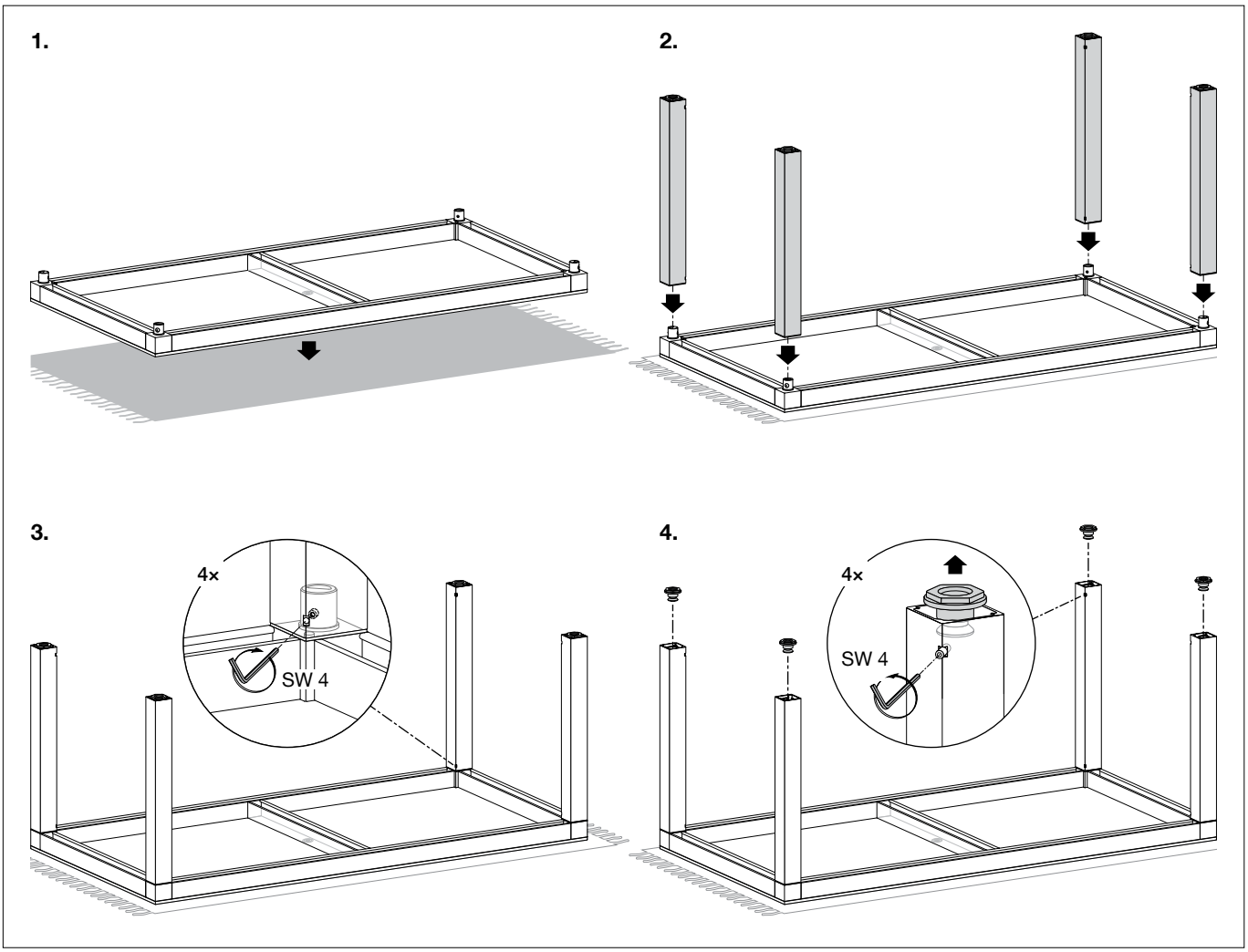

BEGA 1000 Bega Way, Carpinteria, CA 93013 (805)684-0533 © copyright BEGA 2023
Due to the dynamic nature of our products and the associated technologies, data on this sheet is subject to change
at the discretion of BEGA North America. For the most current technical data, please consult factory.

5.

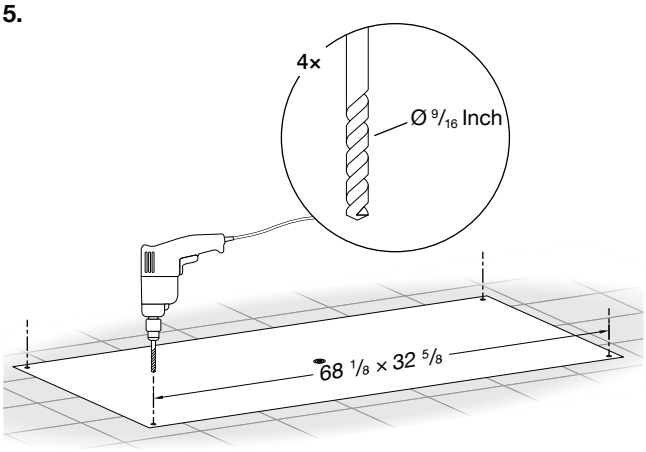

6.

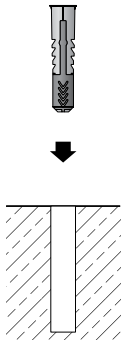

7.

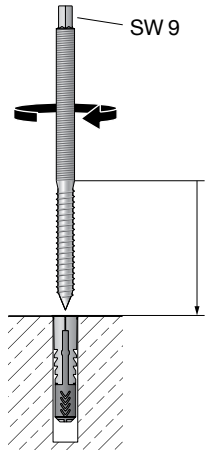

8.

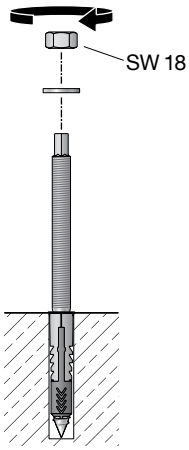

9.

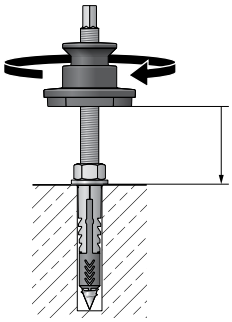

10.

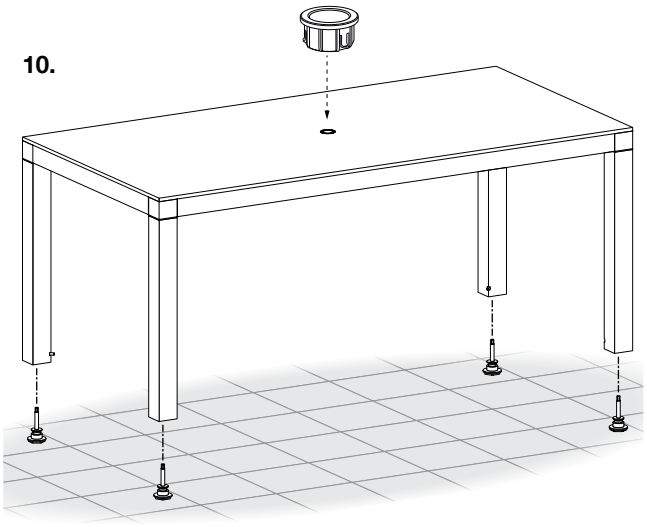

11.

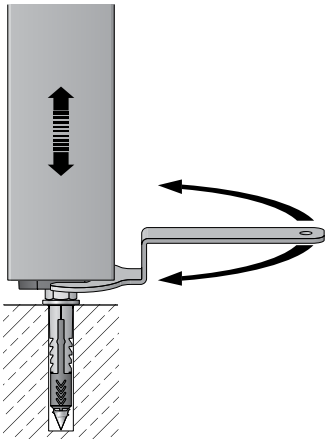

12.

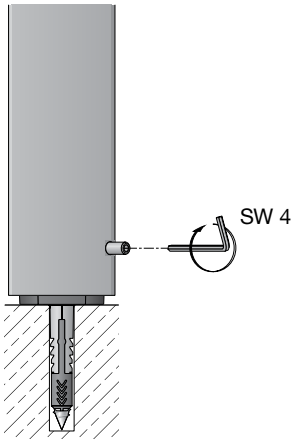

BEGA 1000 Bega Way, Carpinteria, CA 93013 (805)684-0533 © copyright BEGA 2023
Due to the dynamic nature of our products and the associated technologies, data on this sheet is subject to change
at the discretion of BEGA North America. For the most current technical data, please consult factory.